Opus

Alpha Beta Delta Gamma

A champion all categories combined!

Opus

Alpha, Beta, Delta, Gamma

Design and Creativity

Designed by the Porsche Design Studio, Opus lighting sets incorporate all the technical and esthetic assets of lighting specifically intended for the city. They distinctively set off urban sites with a brand name signature placed at the service of street lighting : a meticulous balance between the materials used, finishing touches attesting to sheer perfectionism, modern design, spearhead technology. Highly functional, they benefit from advanced techniques such as a double partitioning system and waterproof vent, to extend the life-cycle of the electrical components and improve overall performance. The Opus street-light, a champion all categories combined!

Design by

PORSCHE DESIGN STUDIO

Update: 03/12/18

Opus

Alpha, Beta, Delta, Gamma

Highlights

- Last generation asymmetrical reflector
- Fixture 100 % injected cast aluminum
- Part in tinted glass, honey comb screen printed pattern
- (esthetic function)
- Personalized trim, to match pole color (possibility of colored Led band)
- Disconnects upon opening
- Tool-free opening via a snap on lever
- Double subdivision system to allow for the distribution of the flow of hot and cold air, to extend the life cycle of the electronic system
- IP 68 VENT. Waterproof vent system, allowing air flow
- Removable flange, quick and simple installation
- IP 66 total light fixture
- Multiple line (currently in study with Porsche Design Studio, new brackets)

Technical characteristics

Materials

Fixture: injected cast aluminum
Trim: injected cast aluminum
Reflector: pressed bright dipped aluminum
Protection: tempered glass
Bracket:

Opus α : welded steel and injected cast aluminum
Opus β, γ and δ: cast aluminum

Protection Shape

Standard: Flat

Protection Finish

Standard: Transparent bicolor screen printing

Optical

EVO 2

Maximum Power

48 LED @ 700 mA

Mounting

Top mounted:

Opus 6α, 6β, 6γ and 6δ: on Ø60
Opus 8α, 8β, 8γ et 8δ: on Ø76

Depth of insertion: 250 mm

Color Standard: RAL of choice

Opus Alpha α

Design and Creativity

- Alpha Bracket
- Individual Thermal Compartments
- Socket Adjustment

Electrical Class

1 and 2

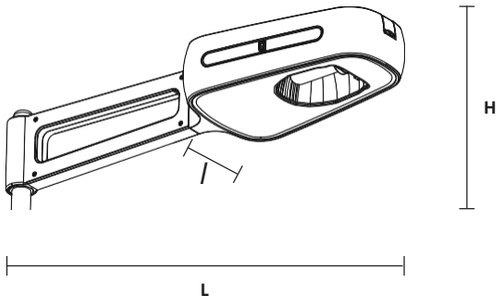

	Opus 6 1 Fixture	Opus 6 2 Fixtures	Opus 6 Mural	Opus 8 1 Fixture	Opus 8 2 Fixtures	Opus 8 Mural
Weight (lb)	27.78	49.16	26.24	43.65	77.6	36.16
(kg)	12.6	22.3	11.9	19.8	35.2	16.4
EPA (ft^2)	1.61	3.12	1.51	2.05	3.98	1.93
CXS (m^2)	0.15	0.29	0.14	0.19	0.37	0.18
Protection Index						
Optical Unit		IP 66			IP 66	
Electrical Compartment		IP 66			IP 66	
Shock Resistance		IK 08			IK 08	
	L	**H**	**l**	**L**	**H**	**l**
Dimensions (in)	46.06	8.66	13.78	58.46	11.02	17.32
Dimensions (mm)	1170	220	350	1485	280	440

Options

Disconnects upon opening

Opus Beta β

Design and Creativity

Beta Bracket

Tool less entry

Locking hatch support

Electrical Class

1 and 2

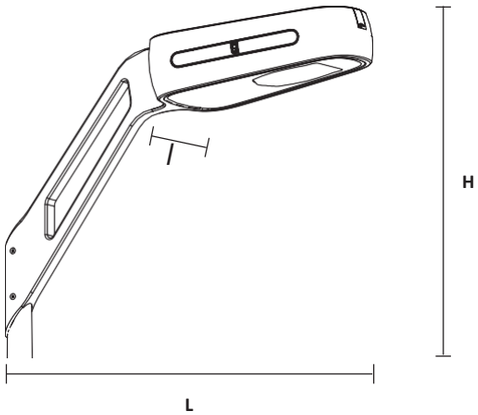

	Opus 6 1 Fixture	Opus 6 2 Fixtures	Opus 6 Mural	Opus 8 1 Fixture	Opus 8 2 Fixtures	Opus 8 Mural
Weight (lb)	35.27	68.34	36.38	49.60	97.66	50.71
(kg)	16	31	16.5	22.5	44.3	23
EPA (ft^2)	1.61	3.12	1.51	2.26	3.98	1.94
CXS (m^2)	0.15	0.29	0.14	0.21	0.37	0.18
Protection Index						
Optical Unit		IP 66			IP 66	
Electrical Compartment		IP 66			IP 66	
Shock Resistance		IK 08			IK 08	
	L	**H**	**I**	**L**	**H**	**I**
Dimensions (in)	38.98	24.41	13.78	49.61	31.10	17.32
Dimensions (mm)	990	620	350	1260	790	440

Options

Disconnects upon opening

Opus Delta δ

Design and Creativity

Delta Bracket

Glass with Honeycomb Screen Print

IP68 Venting

Electrical Class

1 and 2

	Opus 6 1 Fixture	Opus 6 2 Fixtures	Opus 6 2 Fixtures D.	Opus 6 Mural	Opus 8 1 Fixture	Opus 8 2 Fixtures	Opus 8 2 Fixtures D.	Opus 8 Mural
Weight (lb)	56.22	99.21	105.82	45.19	77.16	136.69	145.51	61.73
(kg)	25.5	45	48	20.5	35	62	66	28
EPA (ft²)	1.83	3.23	3.23	1.61	2.26	3.98	4.09	1.94
CXS (m²)	0.17	0.30	0.30	0.15	0.21	0.37	0.38	0.18
Protection Index								
Optical Unit	IP 66				IP 66			
Electrical Compartment	IP 66				IP 66			
Shock Resistance	IK 08				IK 08			

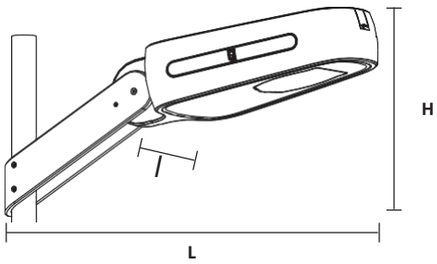

	L	H	l	L	H	l
Dimensions (in)	27.17	7.68	13.78	34.65	9.84	17.32
Dimensions (mm)	690	195	350	880	250	440

Options

Disconnects upon opening

Opus Gamma γ

Design and Creativity

Gamma Bracket

Customized Housing

Fully Waterproof Seals

Electrical Class

1 and 2

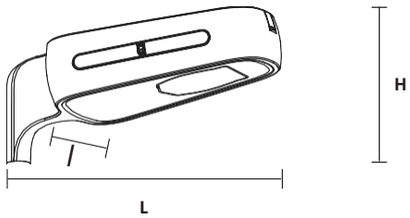

	Opus 6 1 Fixture	Opus 6 2 Fixtures	Opus 6 Mural	Opus 8 1 Fixture	Opus 8 2 Fixtures	Opus 8 Mural
Weight (lb)	36.38	66.14	37.48	50.71	70.55	48.50
(kg)	16.5	30	17	23	32	22
EPA (ft^2)	1.29	2.37	1.29	1.51	2.80	1.61
CXS (m^2)	0.12	0.22	0.12	0.14	0.26	0.15
Protection Index						
Optical Unit		IP 66			IP 66	
Electrical Compartment		IP 66			IP 66	
Shock Resistance		IK 08			IK 08	
	L	**H**	**l**	**L**	**H**	**l**
Dimensions (in)	44.49	10.83	13.78	56.89	9.84	17.32
Dimensions (mm)	1130	275	350	1445	250	440

Options

Disconnects upon opening

Opus

Power and luminous intensity - luminous output

3000K	350 mA			500 mA			700 mA		
Number of LEDs	P_t (W)	Φ (lm)	(lm/W)	P_t (W)	Φ (lm)	(lm/W)	P_t (W)	Φ (lm)	(lm/W)
16	21.4	1988	93	28.2	2867	102	36	3636	101
32	34.4	3976	116	48.8	5734	118	68.9	7271	106
48	51	5964	117	72.6	8601	118	102.3	10907	107

4000K	350 mA			500 mA			700 mA		
Number of LEDs	P_t (W)	Φ (lm)	(lm/W)	P_t (W)	Φ (lm)	(lm/W)	P_t (W)	Φ (lm)	(lm/W)
16	21.4	2147	100	28.2	3097	110	36	3932	109
32	34.4	4294	125	48.8	6193	127	68.9	7863	114
48	51	6441	126	72.6	9290	128	102.3	11795	115

P_t (W) = Total power consumption including driver consumption Φ
Nominal flux (lm)

Ordering Information

Model	Arm	# LED	CCT (K)	Drive Current (mA)	Dist	Line Voltage	Mounting	Color Fixture
OPS								
	Alpha	16	3 – (3000)	35 – (350 mA)	T1	120 V	TP – (Top Mounted)	BLK – (Black)
	Beta	32	4 – (4000)	50 – (500 mA)	T2	220 V	LT – (Lateral)	BRZ – (Bronze)
	Delta	48		70 – (700 mA)	T3	277 V		SLV – (Silver)
	Gamma			Custom	T4	347 V		WHT – (White)
					T5	480 V		(RAL #)
						UNV		

Opus

Design and Creativity

Alpha Arm

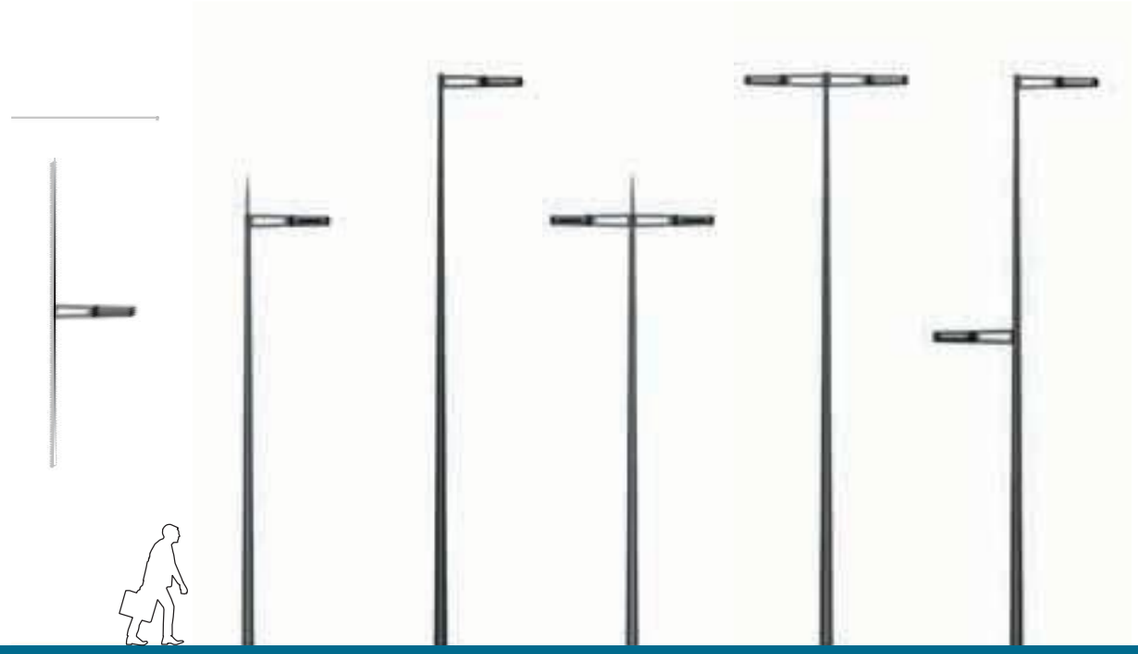

Opus
Suggestions for ensembles

A - Murale
Wall mounting

B - Java 600

C - Java 800

D - Java 600

E - Java 800

F - Java 800

Delta Arm

A - Murale
Wall mounting

B - Java 800

C - Java 800

D - Java 600

Beta β Arm

Opus
Suggestions for ensembles

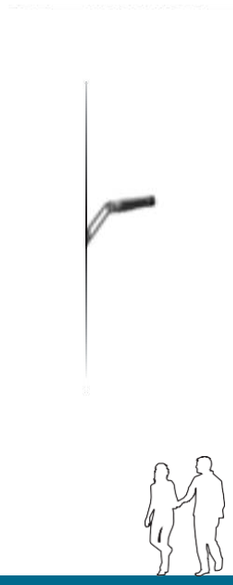

A - Murale
Wall mounting

B - Carré 400
Square

C - Java 600

D - Java 600

E - Java 600

Gamma γ Arm

A - Murale
Wall mounting

B - Java 400

C - Java 600

D - Java 600